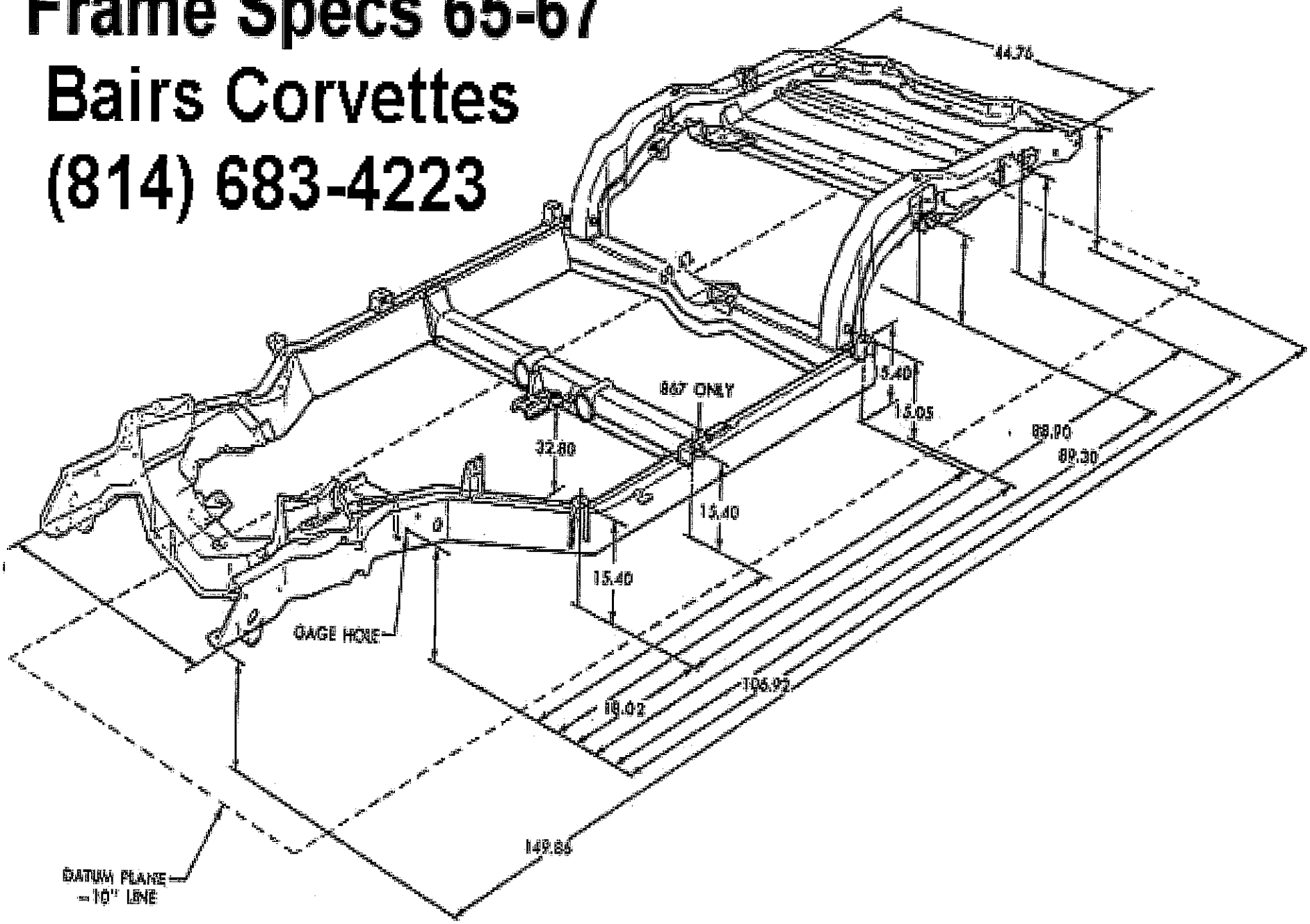Frame Specs 65-67
Bairs Corvettes
(814) 683-4223